IP Link® Device Interface Communication Sheet

This document provides additional assistance with wiring your Extron IP Link enabled product to your device. Different components may require a different wiring scheme than those listed below.

For complete operating instructions, refer to the user's manual for the specific Extron IP Link enabled product or the controlled device manufacturer supplied documentation.

Device Specifications:

Device Type:	Video Projector
Manufacturer:	Mitsubishi
Firmware Version:	5.00
Model(s):	XD480U, XD450U, XD460U, XD490U

Version History:

Driver Version	Date	IP Link Compiler	GC Version	Notes
15	04/22/2013	1.5.1	3.3.2	Modified Lamp Hours query.
14	10/20/2011	1.4.0	3.2.0	Extron Certified. Modified Maximum Lamp Hours Value for GVE compability.
13	8/4/2010	1.4.0	3.2.0	Extron Certified. Fixed Video Mute timing issues.
12	5/18/2010	1.4.0	3.1.1	Extron Certified. Modified driver to turn off AV Mute before Input switching and Power Off. Removed Video Mute and replaced with AV Mute.
11	12/11/2009	1.4.0	3.0.2	Extron Certified. Tested on XD490U.
10	08/19/2009	1.4.0	3.0.0	Updated for MLC62 support.
7	11/24/2008	1.3.11.1	2.4.1	Fixed Lamp Hours issues.
6	04/28/2007	1.3.11.1	2.4	Added Lamp Mode. Removed XD400U model. Updated to new standards.
5	04/04/2006	1.0.9.3	2.1	Extron Certified. Added models XD460U & XD490U.
4	09/02/2005	1.0.9.3	2.0	Extron Certified. Added AV Mute (toggle).
3	05/23/2005	1.0.9.3	N/A	Extron Certified. Custom version. Added AV Mute (toggle).
2	03/29/2005	1.0.9.3	N/A	Extron Certified. Tested on XD480U.
1	02/04/2005	1.0.9.3	N/A	Initial version. Tested on Mitsubishi XL5950U.

Driver Notes:

Queries will not be executed for 10 seconds after the power is turned on.

Control Commands & States:

Aspect Ratio	4:3 / 16:9		
Auto Image*	Execute		
AV Mute	On	Off	
Freeze	Off/On		
Input	Computer 1	Computer 2	Video 1
	Video 2	DVI	
Lamp Mode	Normal Mode	Eco Mode	
Power	On	Off	
Volume (Step)	Up	Down	
Volume (Discrete)	0 to 21		

***:** Not available for inputs Video 1 or Video 2.

Status Available:

Connection Status	Connected	Disconnected	
Input	Computer 1	Computer 2	Video 1
	Video 2	DVI	
Lamp Usage	Hours		
Lamp Mode	Normal Mode	Eco Mode	
Power	On	Off	
Power Status	On	Off	Status Unavailable
AV Mute	On	Off	
Volume (Discrete)	0 to 21		

MLC60 Series Supported Commands:

Aspect Ratio	4:3 / 16:9		
Auto Image	Execute		
AV Mute*	On	Off	
Freeze	Off/On		
Input*	Computer 1	Computer 2	Video 1
	Video 2	DVI	
Lamp Mode	Normal Mode	Eco Mode	
Power*	On	Off	
Volume (Step)	Up	Down	
Volume (Discrete)	0 to 21		

*AV Mute should be off before switching Inputs or powering off.

Cable and Adapter Requirements:

M/F RS-232 Null Modem Serial Cable
Use the RS-232C cable (Mini 8P to D-SUB 9P) that is supplied with projector

Notes for the Device:

- Auto Image - Not Applicable to Video Inputs
- This projector cannot switch inputs while video mute is on.

Serial communication:

Port Type:	8 Pin Mini Din(F)	**Parity:**	None
Baud Rate:	9600	**Stop Bits:**	1
Data Bits:	8	**Flow Control:**	None

Pin Assignments Diagram:

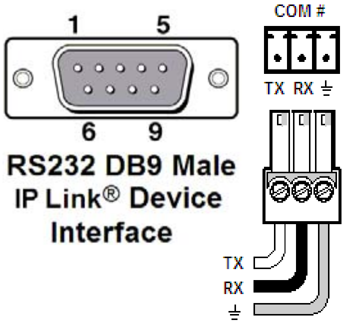

Signal	Pin	Main Cable	Pin	Signal
RxD	2	←	7	TxD
TxD	3	→	1	RxD
GND	5	—	4	GND

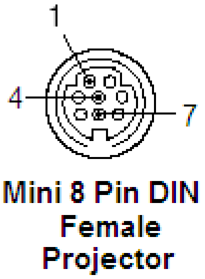

Note: Captive screw connector may also be used as a serial connection.

General Notes: